FloorSure

FLOORSURE CEMENT FLOOR BOARDS INSTALLATION GUIDE

Supplied by Ecobuild Solutions

INDEX	PAGE

INSTALLATION IMPERATIVES 2

A. PRODUCT / ACCESSORIES / TOOLS REQUIRED 2

A1. Product Description 2
A2. Recommended Fasteners, Adhesives, Waterproofing, & Tools/Accessories 3

B. GENERAL COMMENTS 3

B1. Pre-installation Storage 3
B2. Safe Working & Handling 4
B3. Design 4
B4. Board Layout 4
B5. Construction Exposure & Finishes 4

C. INSTALLATION 5

C1. Preparation 5
C2. Fixing Procedure 5
C3. Butt Joints 5
C4. Control Joints for Tiled areas 6
C5. Further Considerations regarding External Installation 6

D. WATERPROOFING 6

D1. System 1: Liquid Membrane Method 6
D2. System 2: Slip Sheet & Reinforced Mortar Bed 6

E. PRODUCT INFORMATION, WARRANTY & DISCLAIMER 6

INSTALLATION IMPERATIVES

1. Boards must be stored flat, dry, undercover and off the ground.
2. Apply continuous 6mm bead of approved construction adhesive to joists.
3. Fill all groove joints with approved joint sealant before engagement (Compulsory for wet areas; Recommended for dry areas).
4. Fastener imperatives:
   a. maximum spacing: 200mm;
   b. at least 4 fasteners across each board width at every joist.
5. Joist centres must be no more than 600mm. Boards, at 2700mm length, are ideally sized for 450mm joist centres.
6. Install with sanded (rough) side up & smooth side down.
7. Once installed, FloorSure boards may remain exposed to normal construction weather, including rain, for up to 90 days. Keep the boards reasonably clean and promptly remove standing water.
8. Within 90 days of installation, the boards must be enclosed or otherwise protected from direct weather, and the specified final floor finish must be applied within 6 months of installation. Before waterproofing, tiling or applying any floor finish, ensure the boards are clean and fully dry.
9. Primers, sealers, epoxy coatings or paint alone are not acceptable final finishes unless expressly approved by Ecobuild Solutions.
10. Use only the adhesives and sealants listed in A2; otherwise the product warranty is void.

A. PRODUCT / ACCESSORIES / TOOLS REQUIRED

A1. PRODUCT DESCRIPTION

1. This document applies to FloorSure boards which are used as structural substrate flooring over timber or steel frames for internal and external applications.
2. FloorSure floor boards have been independently tested and certified to meet NCC/BCA Deemed-to Satisfy structural requirements for floor loadings to AS/NZS 1170.1 Table 3.1. See FloorSure Design and Load Tables for more information.

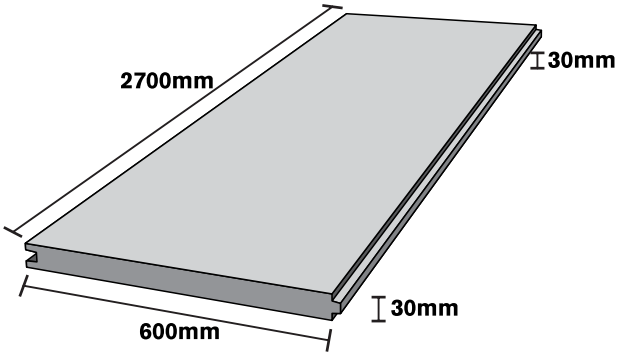

3. Thickness: 30mm.
4. Size: 2700mm × 600mm tongue-and-groove board.
5. Weight: ≈ 61kg per board (≈ 38kg/m²).
6. Composition: High-strength cement composite reinforced with fibreglass mesh.
7. Top Surface: Sanded (rough) side / Bottom Surface: Smooth side positioned on joists.
8. Applications: Internal wet/dry areas and external decks (over timber or light-gauge steel frames).
9. Compliance: NCC/BCA – AS/NZS 1170.1 Table 3.1 (floor loadings). Refer to FloorSure's Design & Load Tables.

A2. RECOMMENDED FASTENERS, ADHESIVES, WATERPROOFING, & TOOLS/ACCESSORIES

FRAMING TYPE	RECOMMENDED FASTENER	NOTES
Timber Joist must be at least 45mm wide	Screw: 10 g × 65mm, minimum Class 3 – eg: • Loose: Koala Deckfast 10G x 65mm • Loose: Simpson Strong-Tie DSV Softwood 10G x 65mm (DSVT212R250) • Collated: Simpson Strong-Tie (Quik Drive) DSV Softwood 10G x 65mm (DSVT212S) Nail: 65 x 2.8mm minimum Class 3 - eg: • Loose: Koala Nail Bullet Head Galvanised - 65 x 2.8mm • Collated: Koala 65x2.8mm with D-Head	Fix through board into joist
Steel Joist 0.75 - 1.6mm BMT	45mm wing-tipped self-drilling screw	Confirm embedment depth per manufacturer
Fastener Spacing	Maximum Spacing: 200mm	Min 4 fasteners per board width over joist

1. Adhesives & Sealants:
    a. HB Fuller: Toolbox Original; Fulaflex 650FC.
    b. Soudal: T-Rex Power Fast Grab / Multibond SMX35 / Multibond SMX50.
    c. Bostik: Seal 'n Flex Premium P795.
    d. Sika: Sikaflex 11FC.
2. Waterproofing – The following systems are recommended:
    a. Ardex/Dunlop Waterproofing.
        a.1. No screed: Dunlop Damp Proof Membrane (one coat) + Dunlop Express Wet Area Waterproofing Membrane (2 coats).
        a.2. Screed:
            a.2.1. On FloorSure board: Dunlop Damp Proof Membrane.
            a.2.2. On screed: Dunlop Multipurpose Primer + Dunlop Express Wet Area Waterproofing Membrane.
    b. Gripset Waterproofing System.
        b.1. Primer: Gripset E60 Primer.
        b.2. Membrane options (dependent on application and as per Gripset specifications): Gripset BRW PF; Gripset XpressLay; Gripset 38 FC; Gripset Express Multi Pro; Gripset 2P.
    c. Duram Waterproofing System.
        c.1. Primer: Azcoseal.
        c.2. Membrane: Durabit Reo, Durabit EF, Multithane STD or H.
    d. Mapei Waterproofing System.
        d.1. Primer: Eco Prim T Plus (1 part primer to 2 parts water); or Eco Prim Grip; or Planiseal MR (if a MVB {Moisture Vapour Barrier} is required), as specified by Mapei for the particular application.
        d.2. Waterproofing Membrane: Mapelastic Smart; or Mapelastic AquaDefense Zero
3. Tools / Accessories:
    a. Nail gun or Screw gun or Screwdriver.
    b. Circular saw with dust extraction.
    c. Poly-diamond or tungsten carbide blade.
    d. Safety attire (PPE) including: gloves, goggles, respirator, appropriate hi-vis clothing
    e. 10mm foam backing rod.
4. Important: When using any of the above fasteners, adhesives/sealants, tools, and/or accessories, the **manufacturer's guidelines must always be followed.**

B. GENERAL COMMENTS

B1. PRE-INSTALLATION STORAGE

1. Store flat on level pallets, indoors and dry.
2. Protect edges and corners from damage and moisture.

B2. SAFE WORKING & HANDLING

1. Cut outside using vacuum extraction.
2. Wear respirator, eye protection, gloves and long-sleeved clothing.
3. Do not dry sweep dust.

B3. DESIGN

1. Ensure floor design complies with AS 1684 (timber) or AS 3623 (steel) and AS/NZS 1170.1 loadings – See FloorSure's Design & Load Tables.
2. Max joist centres 600mm.
3. Ensure adequate sub-floor ventilation and falls for external areas.

B4. BOARD LAYOUT

1. Long edges perpendicular to joists; short edges supported.
2. Sanded (rough) side up & smooth side down.
3. Two options: Staggered Pattern or Squared Pattern.
4. For Staggered Pattern, stagger joints by more than 600mm - ie: min. 2 joist spacings (ie: across 3 joists) between end joints.

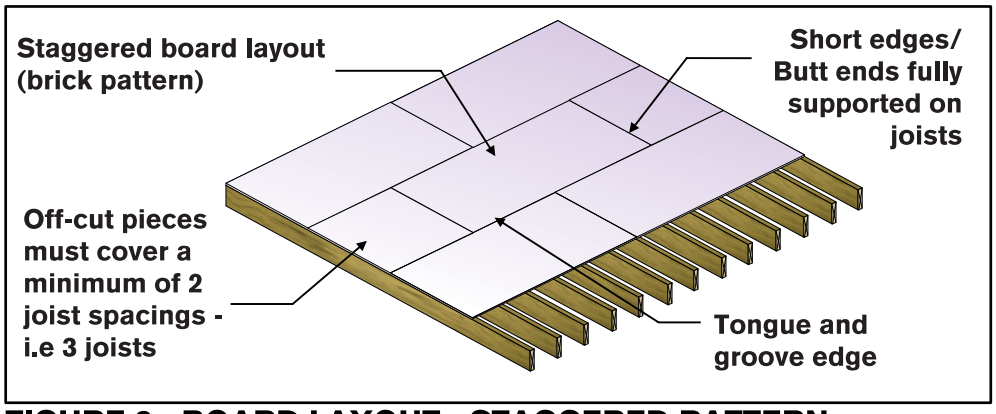

FIGURE 3 - BOARD LAYOUT - STAGGERED PATTERN

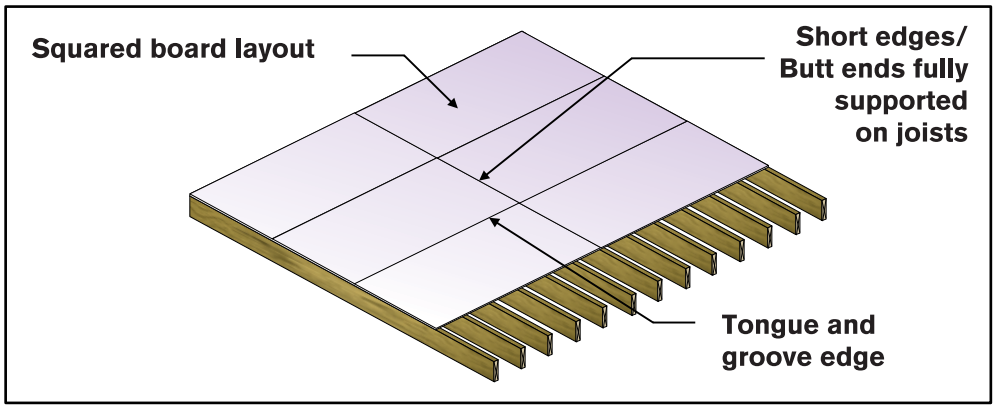

FIGURE 4 - BOARD LAYOUT - SQUARED PATTERN

Table 3 - Board Layout Selection

Internal / External	Finish	Board Layout	Control Joints (indicative only)
Internal	Vinyl, Carpet, Timber, etc (not Tiled)	Staggered	Not required unless specified by engineer
Internal	Tiled dry & wet areas	Staggered	5.4m in direction of board
External	Waterproof system and tiling direct	Squared	2.7m in direction of board and 4.2m in direction of joists
External	Waterproof system, slip sheet, reinforced mortar bed and tile	Staggered	4.1m in direction of board

B5. CONSTRUCTION EXPOSURE AND FINISHES

1. Installed FloorSure boards may remain exposed to normal construction weather, including rain, for up to 90 days. During this period, keep the boards reasonably clean, promptly remove standing water and prevent contamination. Supporting framing and other building components must be protected in accordance with their applicable requirements.

2. Within 90 days of installation, internal areas must be enclosed or otherwise protected from direct weather. External areas must have the specified waterproofing system applied or be temporarily protected until the waterproofing is installed.
3. The specified final floor finish must be applied within 6 months of installation. Before waterproofing, tiling or applying any floor finish, the boards must be clean and fully dry. Follow all preparation and installation requirements of the selected waterproofing, adhesive and flooring systems, and protect installed waterproofing from construction traffic and damage.
4. Wet and external applications require a suitable waterproofing system and compatible floor finish. Dry internal applications may be finished with tiles, vinyl, carpet, timber, laminate or another suitable flooring system. Primers, sealers, epoxy coatings or paint alone are not acceptable final finishes unless expressly approved by Ecobuild Solutions.

C. INSTALLATION

C1. PREPARATION

1. The NCC/BCA must be adhered to at all times in the installation of the FloorSure boards.
2. Confirm framing is clean, dry, level.
3. Ensure framing has a width of at least 45mm.
4. Ensure falls are at least 1:100 for external areas.
5. Determine layout and control joints before starting.

C2. FIXING PROCEDURE

1. Apply 6mm adhesive bead along each joist.
2. Place first board with tongue edge to perimeter; sanded (rough) side up & smooth side down.
3. Apply joint sealant into groove (Compulsory for wet areas; Recommended for dry areas).
4. Engage next board's tongue; remove excess sealant.
5. Fix boards with fasteners no more than 200mm apart; at least 4 fasteners across each board width at every joist.
6. Fastener edge distances: 50mm corner, 25mm edge, 12mm end.
7. Off-cuts must cover at least 2 joist spacings (ie: across 3 joists) and be more than 600mm from the end-joint of the adjacent boards.

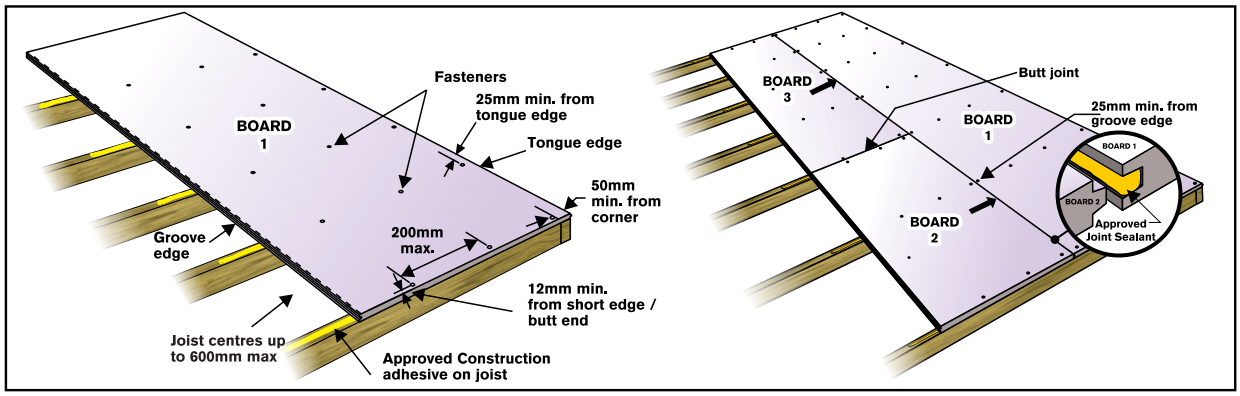

FIGURE 5 - FIXING PROCEDURE

C3. BUTT JOINTS

Refer to the table below for the appropriate butt joints depending on the application:

TABLE 4 - Butt Joints

Application	Gap between adjoining boards	Joint Treatment
Internal – Dry	0mm	Flush fit (no sealant)
Internal – Wet	2mm	Fill with sealant
External	5mm	Place 10mm backing rod into gap to 5mm below surface and fill with sealant (see Figure 6)

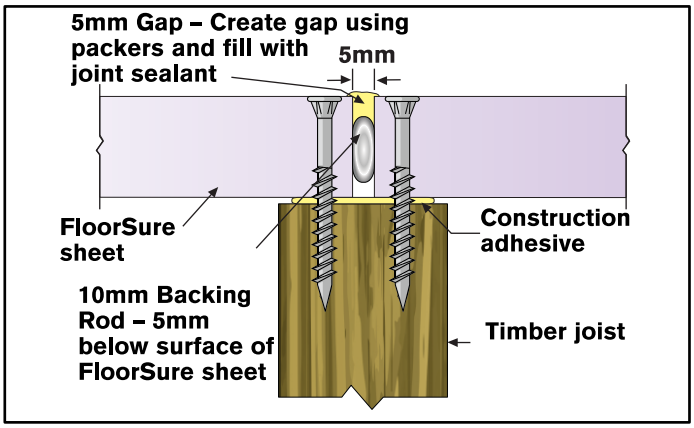

FIGURE 6 – BUTT JOINT: EXTERNAL

C4. CONTROL JOINTS FOR TILED AREAS

Control joints must be installed in tiled FloorSure systems at specified intervals depending on application:

1. Internal areas: every 5.4m along boards (see Figure 7).
2. External (tiles direct): every 2.7m along boards and 4.2m across joists.
3. External (mortar bed): every 4.1m along boards.

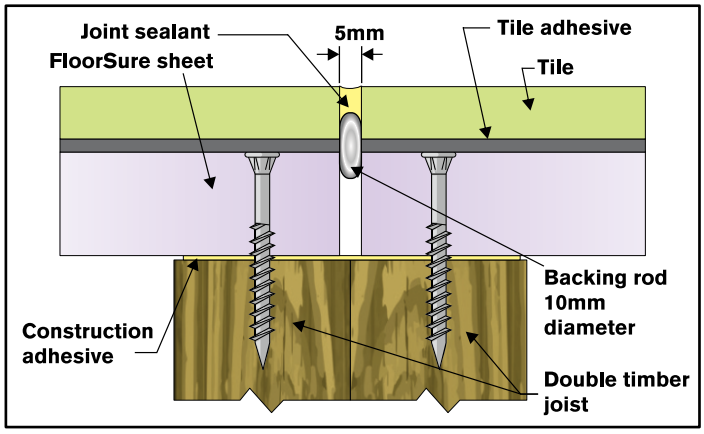

FIGURE 7 – CONTROL JOINT: INTERNAL WITH TILES

They must also be placed where floor direction changes, at room entrances, and over existing structural joints. Additional joints may be needed depending on layout or conditions (refer AS 3958). Floors without tiles generally do not require control joints unless specified by an engineer. Final spacing and placement are determined by the project's engineer or specifier.

C5. FURTHER CONSIDERATIONS RE EXTERNAL INSTALLATION

The builder or responsible party must ensure:

1. The deck's step-down from internal floor level meets NCC/BCA minimums.
2. The deck has a minimum fall of 1:100 away from the building.
3. No sumps are used for drainage.
4. Balustrade posts are fixed to the structural frame, not the FloorSure boards, to avoid damaging the waterproofing.

D. WATERPROOFING

The recommended waterproofing products and systems are listed in A2. Depending on the application, waterproofing must be installed using one of the following two systems:

System 1 – Liquid Membrane Method; or
System 2 – Slip Sheet & Reinforced Mortar Bed.

The waterproofing products and systems are third-party products. Ecobuild Solutions does not warrant their adhesion, compatibility or performance and will not accept claims in this regard. The selected system must be confirmed as suitable and installed in accordance with the supplier's current requirements, the NCC/BCA and the applicable Australian Standards.

D1. SYSTEM 1: LIQUID MEMBRANE METHOD

Summary guide:

1. Primer plus liquid membrane applied to FloorSure surface.
2. Tiles laid directly with compatible adhesive.
3. Control joints as specified in C4 and Table 3: 5.4m along boards for internal tiled areas; 2.7m along boards / 4.2m across joists for external tiled areas

D2. SYSTEM 2: SLIP SHEET & REINFORCED MORTAR BED

Summary guide:

1. Layers: 1. Waterproof membrane; 2. Slip sheet; 3. Reinforced mortar bed (~50mm); 4. Another waterproof membrane (optional); 5. Tiles
2. Control joints every 4.1m along boards.
3. Recommended for spaces/decks over habitable rooms.

E. PRODUCT INFORMATION, WARRANTY & DISCLAIMER

The 10-year FloorSure Product Warranty covers the structural integrity of the FloorSure boards, subject to installation in accordance with this guide and the NCC/BCA and to the terms, conditions and exclusions of the current FloorSure Product Warranty. This guide is for installation reference only and is not a substitute for engineering design. Information in this document is subject to change without notice.

For any questions or comments, contact Ecobuild Solutions at 02 9981 3900 or floorsure@ecobuildsolutions.com.au